JUPITER-9000K/6000K/3000K-H1
Smart Transformer Station

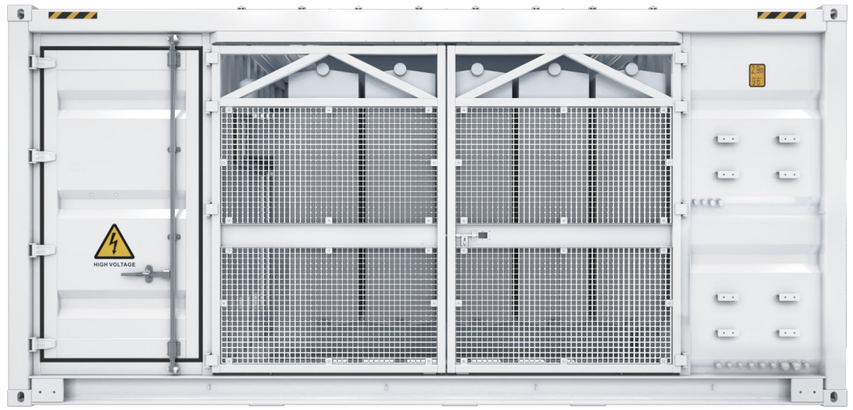

Simple

Prefabricated and pre-tested,
no Internal cabling needed onsite
Compact 20' HC container design for easy transportation

Efficient

High efficiency transformer for higher yields
Lower self-consumption for higher yields

Smart

Real-time detection of transformer,
LV panel and RMU high precision sensor
of LV electricity parameters
Remote control of ACB and MV circuit breaker

Reliable

Robust design against harsh environments optimal cooling
Design for high availability and easy O&M
Comprehensive tests from components, device to solution

Schematic Diagram

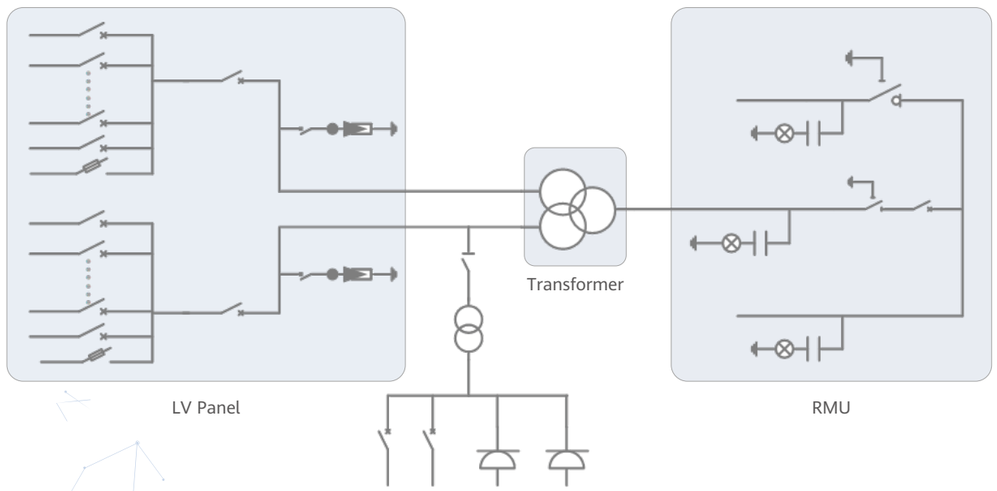

Technical Specifications

Model	JUPITER-9000K-H1	JUPITER-6000K-H1	JUPITER-3000K-H1
Input			
Available Inverters / PCS	SUN2000-330KTL-H1 / SUN2000-330KTL-H2 / LUNA2000-200KTL-H1		
Max. LV AC Inputs	30	22	11
AC Power	9,000 kVA @40°C [1]	6,600 kVA @40°C [1]	3,300 kVA @40°C [1]
Rated Input Voltage	800 V		
LV Panel Segregation	Form 2b		
LV Main Switches	ACB (4,000 A, 2 x 1 pcs)	ACB (2,900 A, 2 x 1 pcs)	ACB (2,900 A, 1 x 1 pcs)
LV Main Switches for Inverters / PCS	MCCB (400 A, 2 x 15 pcs)	MCCB (400 A, 2 x 11 pcs)	MCCB (400 A, 11 pcs)
Output			
Rated Output Voltage	10~35 kV [2]		
Frequency	50 Hz or 60 Hz		
Transformer Type	Oil-immersed, Conservator Type		
Transformer Cooling Type	ONAN		
Transformer Tappings	± 2 x 2.5%		
Transformer Oil Type	Mineral Oil (PCB Free)		
Transformer Vector Group	Dy11-y11	Dy11	
Transformer Min. Peak Efficiency Index	Tier 1 or Tier 2 In Accordance with EN 50588-1		
RMU Type	SF_6 Gas Insulated		
RMU Transformer Protection Unit	MV Vacuum Circuit Breaker Unit		
RMU Cable Incoming / Outgoing Unit	Direct Cable Unit or Cable Load Break Switch Unit		
Auxiliary Transformer	Dry Type Transformer, 5 kVA, Single-phase, li0		
Output Voltage of Auxiliary Transformer	230 / 127 Vac		
Protection			
Transformer Detection & Protection	Oil Level, Oil Temperature, Oil Pressure and Buchholz		
Protection Degree of MV & LV Room	IP 54		
Internal Arcing Fault of STS	IAC A 20 kA 1s		
MV Relay Protection	50/51, 50N/51N		
LV Overvoltage Protection	Type I+II		
Anti-rodent Protection	C5-Medium		
Features			
2 kVA UPS	Optional [3]		
MV Surge Arrester for Transformer	Optional [3]		
General			
Dimensions (W x H x D)	6,058 x 2,896 x 2,438 mm (20' HC ISO Container)		
Weight	< 28 t	< 23 t	< 15 t
Operating Temperature Range	-25°C ~ 60°C [4]		
Relative Humidity	0% ~ 95% (Non-condensing)		
Max. Operating Altitude	1,000 m [5]		
MV-LV AC Connections	Prewired and Pretested, No Internal Cabling Onsite		
LV & MV Room Cooling	Smart Cooling without Air-across for Higher Availability		
Communication	Modbus TCP, Preconfigured with SmartACU2000D		
Standards Compliance			
IEC 62271-202, EN 50588-1, IEC 60076, IEC 62271-200, IEC 61439-1			

1: More detailed AC power of STS, please refer to the de-rating curve.
2: Rated output voltage from 10 kV to 35 kV, more available upon request
3: Extra expense needed for optional features which standard product doesn't contain, more options upon request.
4: When ambient temperature ≥55 ℃, awning shall be equipped for STS on site by customer.
5: For higher operating altitude, pls consult with Huawei.