SUN2000-215KTL-H0
Smart String Inverter

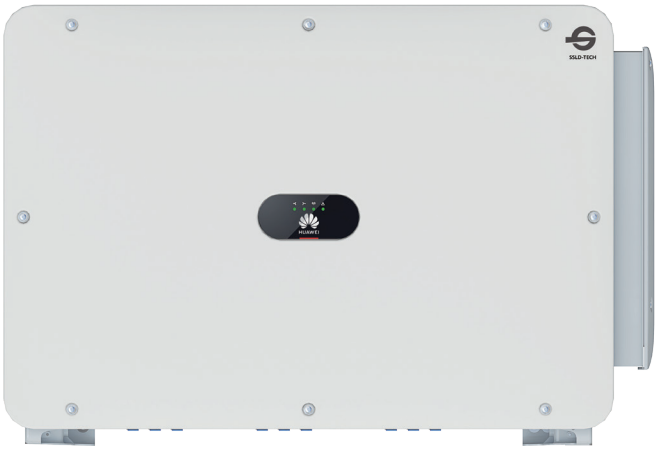

- 9 MPPTs
- Max. Efficiency ≥99.0%
- Smart String-level Disconnection
- Smart I-V Curve Diagnosis Supported
- MBUS Supported
- Fuse Free Design
- Surge Arresters for DC & AC
- IP66 Protection

Efficiency Curve

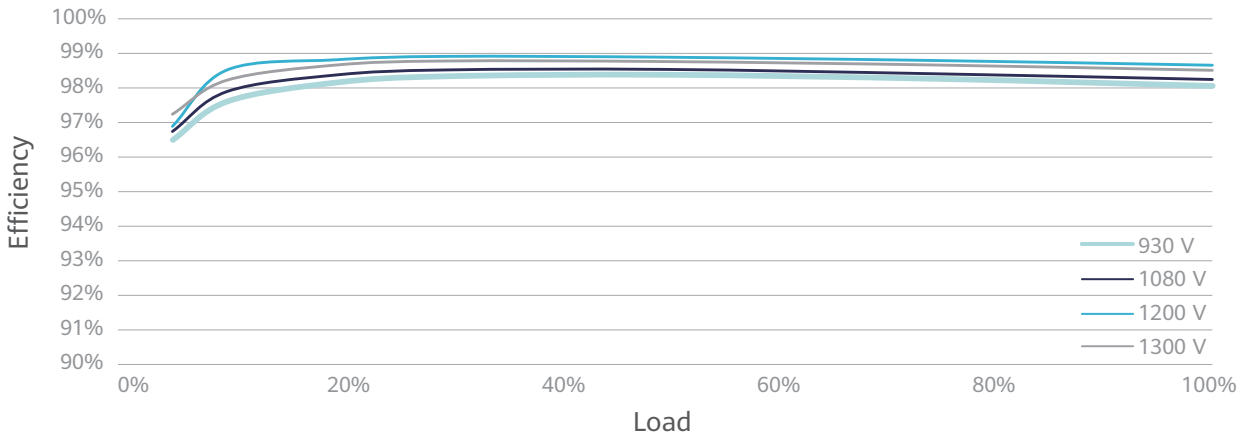

Circuit Diagram

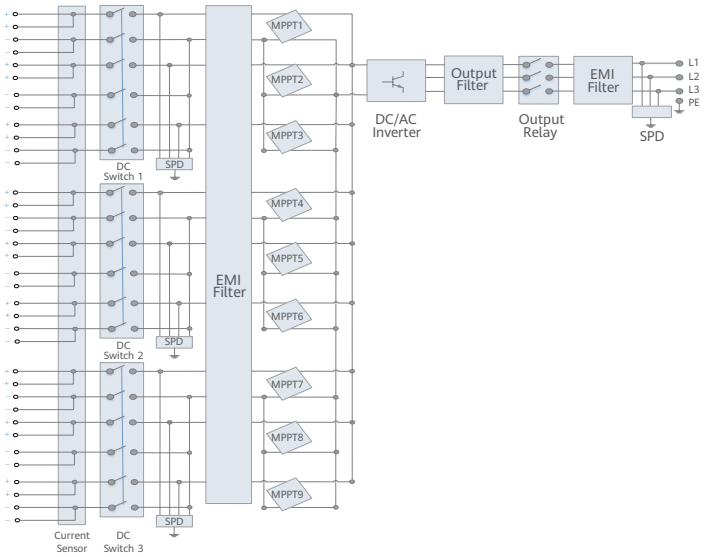

Technical Specifications

Efficiency	
Max. Efficiency	99.00%
European Efficiency	98.80%
Input	
Max. Input Voltage	1,500 V
Max. Current per MPPT	30 A
Max. Short Circuit Current per MPPT	50 A
Start Voltage	550 V
MPPT Operating Voltage Range	500 V ~ 1,500 V
Nominal Input Voltage	1,080 V
Number of Inputs	18
Number of MPPT	9
Output	
Nominal AC Active Power	200,000 W
Max. AC Apparent Power	215,000 VA
Max. AC Active Power (cosϕ=1)	215,000 W
Nominal Output Voltage	800 V, 3W + PE
Rated AC Grid Frequency	50 Hz / 60 Hz
Nominal Output Current	144.4 A
Max. Output Current	155.2 A
Adjustable Power Factor Range	0.8 LG ... 0.8 LD
Total Harmonic Distortion	THD_i < 1% (Rated)
Protection	
Smart String-level Disconnection (SSLD)	Yes
AC Overcurrent Protection	Yes
DC Reverse-polarity Protection	Yes
PV-array String Fault Detection	Yes
DC Surge Arrester	Type II
AC Surge Arrester	Type II
DC Insulation Resistance Detection	Yes
Residual Current Detection Unit	Yes
Communication	
Display	LED Indicators, USB + APP
USB	Yes
MBUS	Yes
RS485	Yes
General	
Dimensions (W x H x D)	1,035 x 700 x 365 mm
Weight (with mounting plate)	≤ 86 kg
Operating Temperature Range	-25°C ~ 60°C
Cooling Method	Smart Air Cooling
Max. Operating Altitude without Derating	4,000 m
Relative Humidity	0 ~ 100% (Non-condensing)
DC Connector	MC4 EVO2
AC Connector	Support OT / DT Terminal
Protection Degree	IP66
Anti-corrosion Protection	C5-Medium
Topology	Transformerless
Standards Compliance	
IEC 62109-1/-2, IEC 62920, EN 50549-2, EN 50530, etc.	