SUN2000-330KTL-H2

Smart String Inverter

For MEA, Eurasian



Max. Efficiency ≥ 99.0%

Smart Connector-level Detection (SCLD)

Smart Self-cleaning Fan (SSCF)

IP66 Protection

MBUS Supported

Smart String-level Disconnection (SSLD)

Smart IV Curve Diagnosis Supported

Surge Arresters for DC & AC

Efficiency Curve

Circuit Diagram

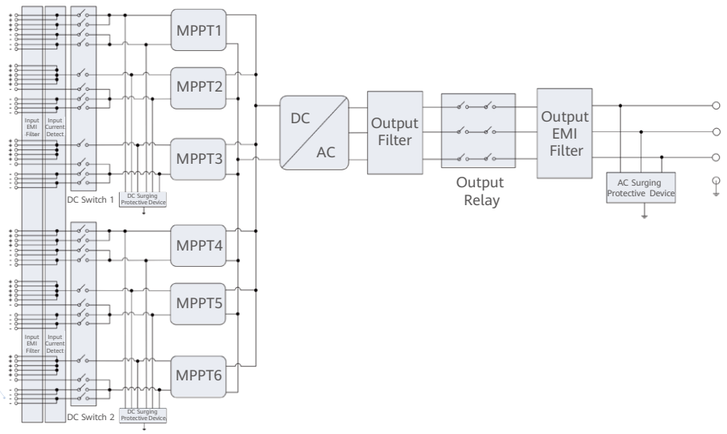

Technical Specifications

Efficiency	
Max. Efficiency	≥ 99.0%
European Efficiency	≥ 98.8%
Input	
Max. Input Voltage	1,500 V
Number of MPPT	6
Max. Current per MPPT	65 A
Max. Short Circuit Current per MPPT	115 A
Max. PV Inputs per MPPT	4/5/5/4/5/5
Start Voltage	550 V
MPPT Operating Voltage Range	500 V ~ 1,500 V
Nominal Input Voltage	1,080 V
Output	
Nominal AC Active Power	275,000 W[1]
Max. AC Apparent Power	330,000 VA
Max. AC Active Power (cosϕ=1)	330,000 W
Nominal Output Voltage	800 V, 3W + PE
Rated AC Grid Frequency	50 Hz / 60 Hz
Nominal Output Current	198.5 A
Max. Output Current	240.3 A
Adjustable Power Factor Range	0.8 LG ... 0.8 LD
Total Harmonic Distortion	THD_i < 1% (Rated)
Protection	
Smart String-level Disconnection (SSLD)	Yes
Smart Connector-level Detection (SCLD)	Yes
AC Overcurrent Protection	Yes
DC Reverse-polarity Protection	Yes
PV-array String Fault Detection	Yes
DC Surge Arrester	Type II
AC Surge Arrester	Type II
DC Insulation Resistance Detection	Yes
Residual Current Detection Unit	Yes
Communication	
Display	LED Indicators, WLAN + APP
USB	Yes
MBUS	Yes
RS485	Yes
General	
Dimensions (W x H x D)	1,048 x 732 x 395 mm
Weight (with mounting plate)	≤ 112 kg
Operating Temperature Range	-25°C ~ 60°C
Cooling Method	Smart Air Cooling
Max. Operating Altitude without Derating	4,000 m
Relative Humidity	0 ~ 100% (Non-condensing)
DC Connector	HH4SMM4TMSPA / HH4SFM4TMSPA
AC Connector	Support OT / DT Terminal (Max. 400 mm^2)
Protection Degree	IP 66
Anti-corrosion Protection	C5-Medium
Topology	Transformerless
Standards Compliance	
IEC 62109-1/-2, IEC 62920, IEC 60947-2, EN 50549-2, IEC 61683, etc.	

1: Environmental temperature is 50°C

columbus Official representative in Ukraine

+380 93 714 59 95 • info@columbusenergy.com.ua • columbusenergy.com.ua