MVS8960-LV

MV Turnkey Solution for 1500 Vdc String Inverter SG350HX / SG350HX-20



SAVED INVESTMENT

- Up to 9.8 MW block design
- Standard container design for efficient transportation
- Pre-assembled for quick setup and commissioning

SAFETY

- MV and LV isolated, independent control room
- All key components front accessible, no need walk-in operation

EASY O&M

- Online diagnostics for rapid troubleshooting
- Modular design for easy main device replacement

RELIABLE

- All components type-tested
- Compliance with standards: IEC 60076, IEC 62271, IEC 61439

CIRCUIT DIAGRAM

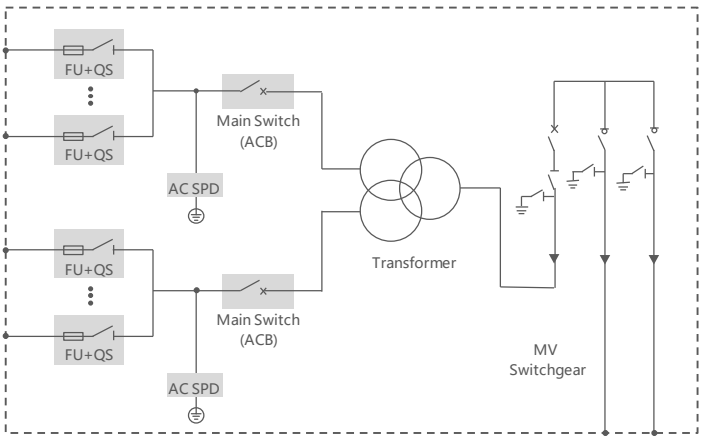

SUNGROW
Clean power for all

Type designation	MVS8960-LV
Transformer	
Transformer type	Oil immersed
Rated power	8960 kVA @ 40 ℃
Max. power	9856 kVA @ 30 ℃
Vector group	Dy11y11
LV / MV voltage	0.8 kV - 0.8 kV / (20 – 35) kV
Maximum input current at nominal voltage	3557 A * 2
Frequency	50 Hz
Tapping on HV	0, ± 2 * 2.5 %
Efficiency	Tier2
Cooling method	ONAN (Oil Natural Air Natural)
Impedance	9.5 % (± 10 %)
Oil type	Mineral oil (PCB free)
Winding material	Al / Al
Insulation class	A
MV switchgear	
Insulation type	SF6 ***
Rated voltage range	24 kV – 40.5 kV
Rated current	630 A
Internal arcing fault	IAC AFL 20 kA / 1 s
LV panel	
Main switch specification	4000 A / 800 Vac / 3P, 2 pcs
Disconnector specification	260 A / 800 Vac / 3P, 28 pcs
Fuse specification	350A / 800 Vac / 1P, 84 pcs
Protection	
AC input protection	Fuse+Disconnector
Transformer protection	Oil-temperature, Oil-level, Oil-pressure, Buchholz
Relay protection	50 / 51, 50 N / 51 N
Surge protection	AC Type I + II
General data	
Dimensions (W*H*D)	6058 mm * 2896 mm * 2438 mm
Approximate weight	24 T
Operating ambient temperature range *	-30 ℃ – 60 ℃ **
Auxiliary transformer supply	15 kVA / 400 V (optional: max. 40 kVA)
Degree of protection	IP54
Allowable relative humidity range (non-condensing)	0 % – 95 %
Operating altitude	1000 m (standard) / > 1000 m (optional)
Communication	Standard: RS485, Ethernet, Optical fiber
Compliance	IEC 60076, IEC 62271-200, IEC 62271-202, IEC 61439-1, EN 50588-1

* The ambient temperature is determined as the average temperature obtained from at least four evenly distributed temperature monitoring points located at a distance of 1 meter from the equipment, at a height halfway up the machine. The temperature sensors must be shielded from airflow, thermal radiation, and rapid temperature fluctuations to prevent display inaccuracies.
** When the temperature is below -20℃, optional configuration is required.
*** 24kV RMU is SF6-Free.

columbus Official representative in Ukraine +380 93 714 59 95 • info@columbusenergy.com.ua • columbusenergy.com.ua